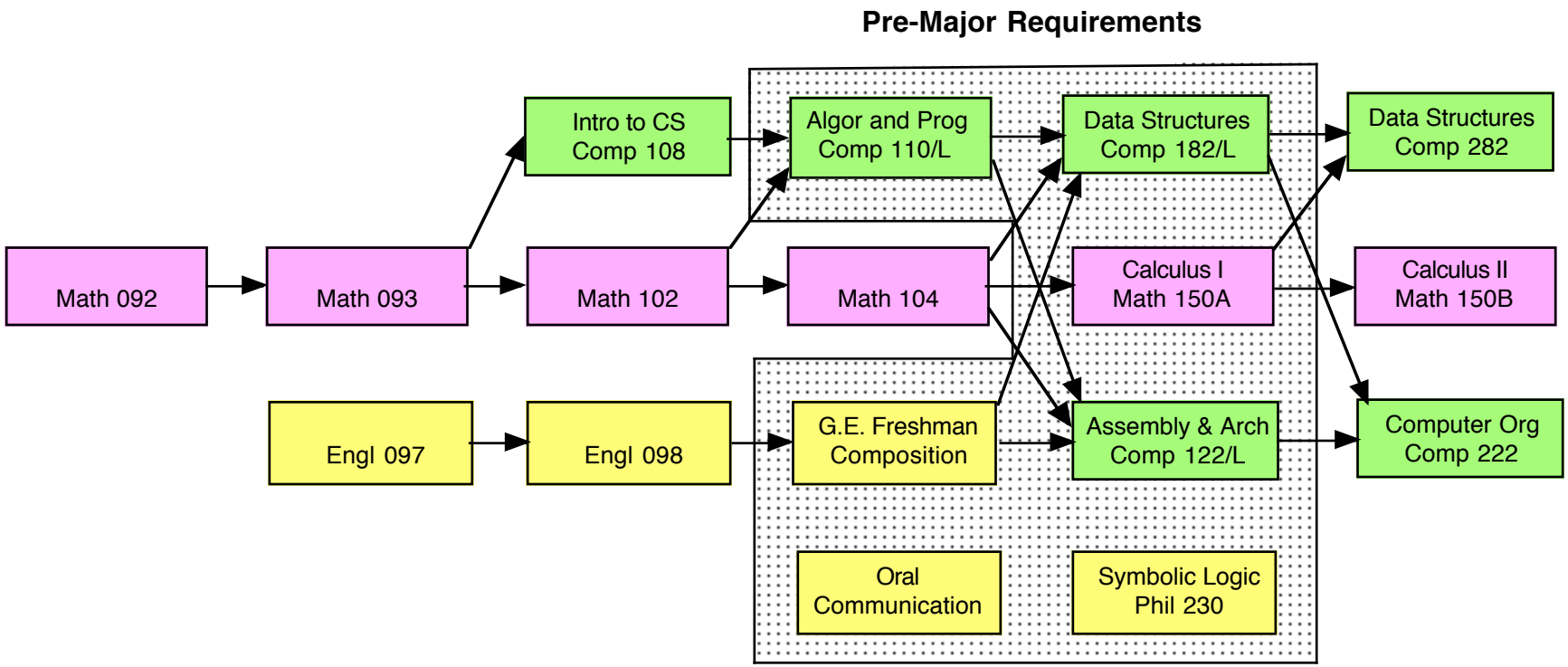CSUN COMPUTER SCIENCE PRE-MAJOR INFORMATION
Lead-in Courses in Mathematics and English